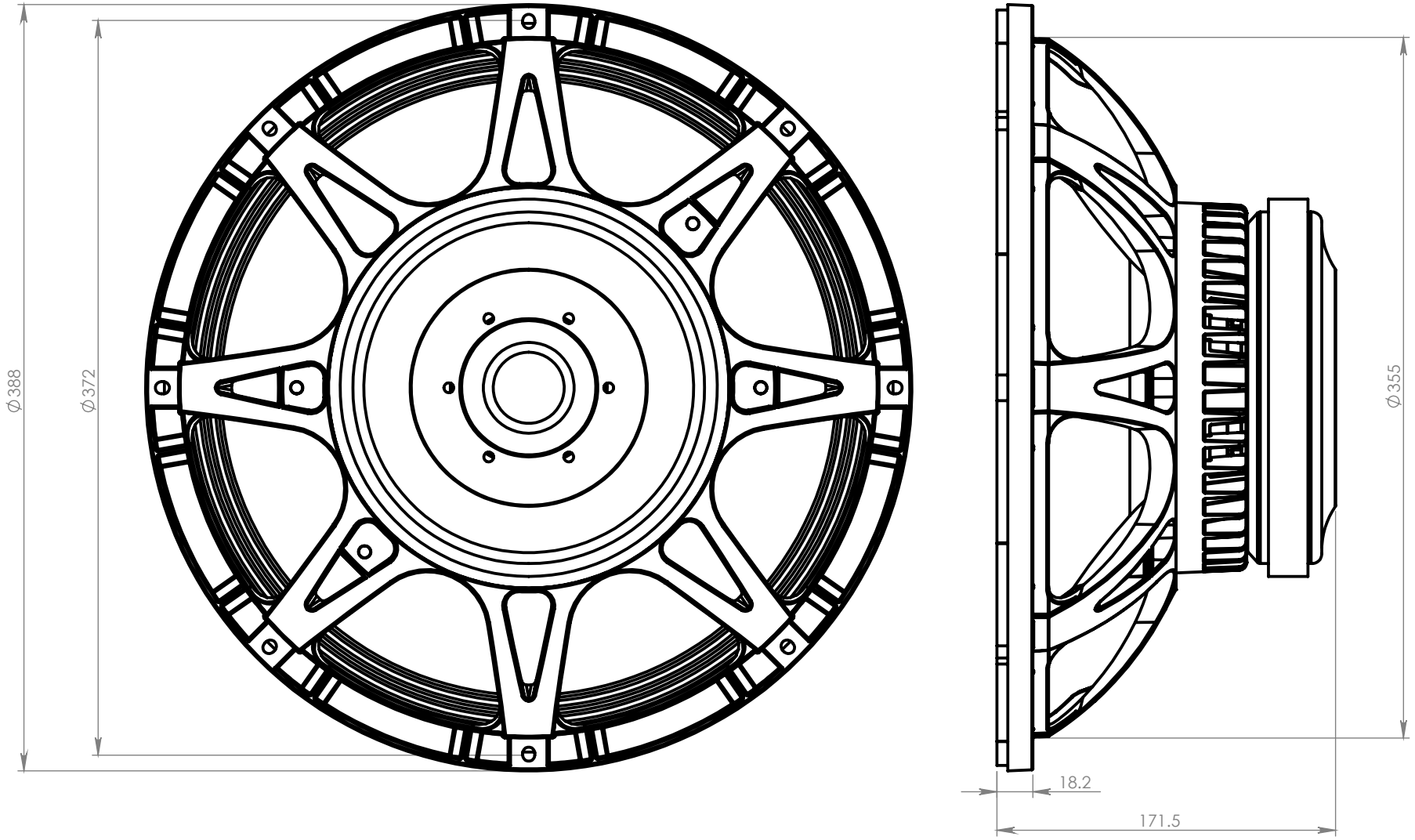

OBERTON

model: 15B500

Dimensions are in mm		Scale: 1:3