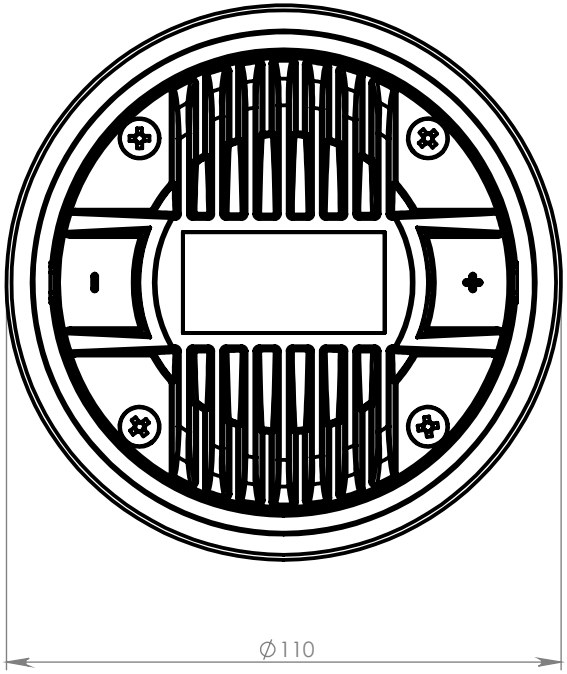

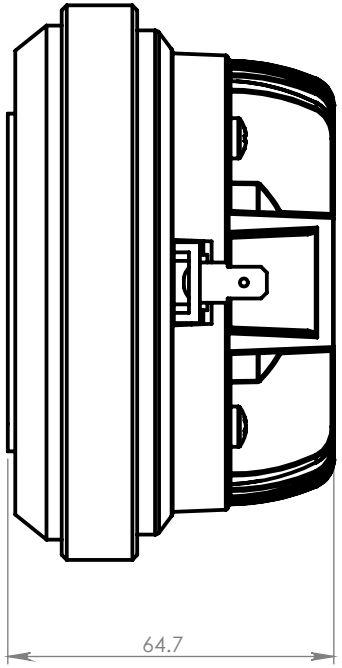

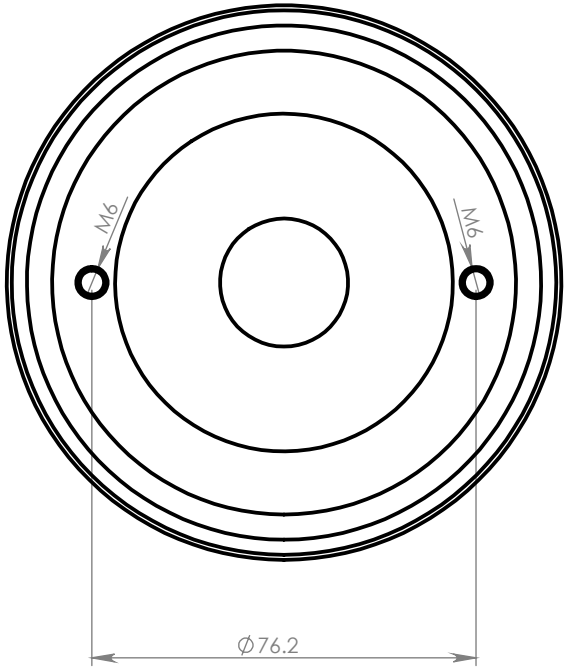

OBERTON

model: D2544

Dimensions are in mm		Scale: 1:1.5